FÉDÉRATION INTERNATIONALE DE SKI
INTERNATIONAL SKI FEDERATION
INTERNATIONALER SKI VERBAND

No. 296 / FRA 15 5ème prolongation

CERTIFICATE OF JUMPING HILL
CERTIFICAT DE CONFORMITE
SCHANZENPROFILBESTÄTIGUNG

Date of issue **Établi le** **Ausgestellt am**	**09.12.2011**	**Valid till** **Valable jusq` au** **Gültig bis**	**31.12.2016**
Place:	**Courchevel**	**Name:**	**W 90**
HS =	**96 m**	**h/n 0.547**	**Vo = 24m/s**

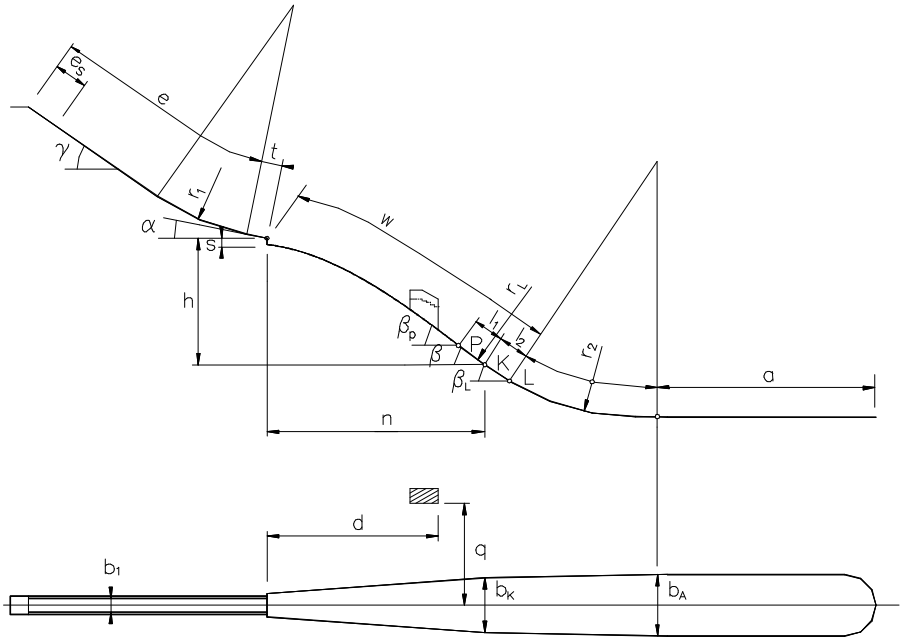

e	=	89.5 m	l_1	=	20 m	P	=	70 m
e_s	=	24 m	l_2	=	m	K	=	90 m
t	=	6.3 m	a	=	100 m	L	=	m
γ	=	35 °	β_p	=	36 °	b_1	=	2.4 m
α	=	10.5 °	β	=	36 °	b_K	=	18.6 m
r_1	=	88 m	β_L	=	°	b_A	=	19.8 m
h	=	42.95 m	r_L	=	m	d	=	51.75 m
n	=	78.51 m	r_2	=	107/218 m	q	=	18.80 m
s	=	3.5 m						

Remarks/Remarques/Bemerkungen:

JUMPING HILL APPROVED BY THE FIS
TREMPLIN HOMOLOGUE PAR LA FIS
DURCH DIE FIS GENEHMIGTE SPRUNGSCHANZE

SUB-COMMITTEE FOR JUMPING HILLS

CHAIRMAN: